STRUCTURAL REQUIREMENTS

REINFORCED CONCRETE

1. STRUCTURAL CONCRETE SHALL COMPLY WITH THE MOST RESTRICTIVE REQUIREMENTS ACCORDING TO ACI 318 TABLE 4.3.1 FOR THE EXPOSURE CATEGORIES AND CLASSES LISTED BELOW.

STRUCT. MEMBER	EXPOSURE CATEGORY AND CLASS	
FOOTINGS	F, FREEZING & THAWING:	F0 - NEGLIGIBLE
SLABS		
	S, SULFATE:	S2 - SEVERE
	W, IN CONTACT W/ WATER:	W0 - NOT APPLICABLE
	C, CORROSION PROT. OF REINF.:	C0 - NOT APPLICABLE

2. MINIMUM CONCRETE MIX REQUIREMENTS:
   CONCRETE COMPRESSIVE STRENGTH, f'c: 4500 PSI.
   MAXIMUM WATER TO CEMENT RATIO: 0.45
   CEMENTITIOUS MATERIAL: TYPE V
3. STRUCTURAL CONCRETE SHALL REACH A MINIMUM 3-DAY COMPRESSIVE STRENGTH OF 1500 PSI AND SHALL REACH THE SPECIFIED COMPRESSIVE STRENGTH IN 28 DAYS. CONCRETE COMPRESSIVE TESTS SHALL CONFORM TO ASTM C 140 "TEST METHOD SAMPLING AND TESTING CONCRETE MASONRY UNITS AND RELATED UNITS". CEMENTITIOUS MATERIAL SHALL CONFORM TO ASTM C 150 "SPECIFICATION FOR PORTLAND CEMENT".
4. THE CONCRETE SHALL BE PROPORTIONED AND PRODUCED TO HAVE A SLUMP OF 4 INCHES OR LESS. A TOLERANCE OF 1 INCH ABOVE THIS AMOUNT SHALL BE PERMITTED FOR INDIVIDUAL BATCHES PROVIDED THE AVERAGE FOR ALL BATCHES DOES NOT EXCEED 4 INCHES. THE SLUMP SHALL BE DETERMINED BY "STANDARD TESTING METHOD FOR SLUMP OF PORTLAND CEMENT CONCRETE" (ASTM C 143). WHERE A SUPERPLASTICIZER ADMIXTURE IS USED, MAXIMUM SLUMP IS ALLOWED TO BE INCREASED 1-1/2" FOR EACH 1% OF SUPERPLASTICIZER UP TO A MAXIMUM INCREASE OF 3".
5. WATER USED IN MIXING CONCRETE SHALL BE CLEAN FROM INJURIOUS AMOUNTS OF OILS, ACIDS, ALKALIS, SALTS, ORGANIC MATERIALS, OR OTHER SUBSTANCES DELETERIOUS TO CONCRETE OR REINFORCEMENT. NONPOTABLE WATER SHALL NOT BE USED.
6. CONCRETE AGGREGATES SHALL CONFORM TO ASTM C 33 "STANDARD SPECIFICATIONS FOR CONCRETE AGGREGATES" OR ASTM C 330 "STANDARD SPECIFICATION FOR LIGHTWEIGHT AGGREGATES". THE NORMAL MAXIMUM SIZE OF COARSE AGGREGATES SHALL NOT BE LARGER THAN: 1/5 THE DISTANCE BETWEEN THE SIDES OF FORMS, 1/3 THE SLAB DEPTH, OR 3/4 THE MINIMUM CLEAR SPACING BETWEEN INDIVIDUAL REINFORCING BARS OR WIRES, BUNDLES OF BARS, INDIVIDUAL TENDONS, OR DUCTS.
7. DEFORMED CONCRETE REINFORCING SHALL BE GRADE 60 REINFORCING STEEL CONFORMING TO ASTM A 615 "STANDARD SPECIFICATION FOR DEFORMED AND PLAIN CARBON-STEEL BARS FOR CONCRETE REINFORCEMENT.
8. BAR MATS FOR CONCRETE REINFORCING SHALL CONFORM TO ASTM A 184 "STANDARD SPECIFICATION FOR WELDED DEFORMED STELL BAR MATS FOR CONCRETE REINFORCEMENT. REINFORCING BARS USED IN BAR MATS SHALL CONFORM TO ASTM A 515 OR ASTM A 706.
9. WELDED PLAIN WIRE FOR CONCRETE REINFORCEMENT SHALL NOT BE SMALLER THAN D4 AND SHALL CONFORM TO ASTM A 496 "STANDARD SPECIFICATION FOR STEEL WIRE, DEFORMED, FOR CONCRETE REINFORCEMENT". WELDED DEFORMED WIRE FOR CONCRETE REINFORCEMENT SHALL CONFORM TO ASTM A 497 "STANDARD SPECIFICATION FOR STEEL WELDED WIRE, DEFORMED, FOR CONCRETE REINFORCEMENT".
10. WELDED WIRE FOR CONCRETE REINFORCEMENT SHALL NOT BE SMALLER THAN D4 AND SHALL CONFORM TO ASTM A 496 "STANDARD SPECIFICATION FOR STEEL WIRE, DEFORMED, FOR CONCRETE REINFORCEMENT".
11. NO ADMIXTURES, OTHER THAN AIR-ENTRAINING ADMIXTURE CONFORMING ASTM C 260 OR SUPERPLASTICIZER ADMIXTURE CONFORMING TO ASTM C 494 MAY BE USED WITHOUT THE WRITTEN APPROVAL FROM THE ENGINEER. CALCIUM CHLORIDE AND CONCRETE ADMIXTURES CONTAINING CHLORIDE SALTS ARE NOT PERMITTED.
12. ALL REINFORCING LAP SPLICES SHALL BE CLASS 'B' SPLICES UNLESS NOTED OTHERWISE. LAP ALL REINFORCING BARS ACCORDING TO THE FOLLOWING LAP SPLICE SCHEDULE. WHERE BEAM REINFORCING IS REQUIRED TO BE SPLICED, SPLICING SHALL ONLY TAKE PLACE IN COMPRESSION REGIONS, I.E. BOTTOM REINFORCING SPLICES ALLOWED OVER SUPPORTS AND TOP REINFORCING SPLICES ALLOWED IN THE BEAM MIDSPANS. WHERE COLUMN VERTICAL REINFORCING IS REQUIRED TO BE SPLICED, SPLICING WILL BE PERMITTED ONLY AT FLOOR LEVELS OR AREAS OF LATERAL SUPPORT.

REINFORCED CONCRETE LAP SPLICE SCHEDULE

F'c = 2500 PSI AT 28 DAYS		REINFORCEMENT LENGTH (INCHES)					
SPLICE CLASS	REINFORCEMENT LOCATION	#3 BARS	#4 BARS	#5 BARS	#6 BARS	#7 BARS	#8 BARS
A	TOP*	24	32	39	47	69	78
	BOTTOM	18	24	30	36	53	60
B	TOP*	31	41	51	61	89	102
	BOTTOM	24	32	39	47	69	78

*TOP DENOTES HORIZONTAL REINFORCING W/ 12" OF FRESH CONCRETE BELOW THE LEVEL OF REINFORCING

FOUNDATION & SLAB ON GRADE

1. CONTRACTOR SHALL COMPLY WITH RECOMMENDATIONS IN THE PROJECT SOILS REPORT AND ALL ADDENDUMS, LETTERS, AND OTHER ASSOCIATED DOCUMENTS:
   PROJECT SOILS REPORT: GEOTEK RESIDENTIAL, LLC PROJECT NO. 16754-LVR DATED MAY 17, 2023.
2. ALLOWABLE BEARING PRESSURE = 2200 PSF
   ACTIVE LATERAL EARTH PRESSURE = 35 PCF
   AT REST LATERAL EARTH PRESSURE = 50 PCF
   PASSIVE LATERAL EARTH PRESSURE = 250 PCF
   COEFFICIENT OF FRICTION = 0.35
   MINIMUM FOOTING DEPTH = 12" BELOW THE NEAREST ADJACENT FINAL GRADE.
3. STRUCTURAL FILL UNDER FOOTINGS SHALL BE ACCORDING TO THE FOLLOWING:
   CONTINUOUS FOOTINGS.....PER SOILS REPORT
   SPOT FOOTINGS.....PER SOILS REPORT
   SLABS ON GRADE.....PER SOILS REPORT
   UNDER SLAB BASE COURSE.....PER SOILS REPORT
4. STRUCTURAL FILL TO EXTEND BEYOND PERIMETER OF FOOTING A MINIMUM OF 6" PER 12" OF FILL DEPTH.
5. ALL THE MATERIALS PLACED AT THE SITE FOR THE FOUNDATION AND BUILDING SHALL BE COMPACTED TO 95% OR AS RECOMMENDED IN THE GEOTECHNICAL REPORT.
6. CONTRACTOR SHALL ASSURE THAT FOOTINGS ARE PROPERLY DRAINED AND THAT SOIL IS DRY AND THAT BUILDING HORIZONTAL CLEARANCE FROM FOOTINGS TO ASCENDING SLOPES SHALL BE A MINIMUM OF 25 FEET UNLESS APPROVED BY GEOTECHNICAL ENGINEER. FOOTING TRENCHES TO BE CLEARED OF ALL DELETERIOUS MATERIAL BEFORE CONCRETE IS POURED.
7. PROVIDE CRACK CONTROL JOINTS @ 10'-0" O.C. MAX. JOINTS SHOULD BE INSTALLED WITHIN 4 HOURS OF CONCRETE PLACEMENT.
8. CONTRACTOR TO FOLLOW ALL SITE PREPARATION RECOMMENDATIONS FROM SOILS REPORT FOUNDATION STEPS SHALL NOT EXCEED 4 FEET OR ½ THE HORIZONTAL DISTANCE BETWEEN STEPS. HORIZONTAL REBAR SHALL BE 12" O.C. THROUGH STEP DOWNS AND EXTEND 48 INCHES EITHER SIDE OF STEP.
9. ALLOW FOUNDATION 14 DAYS MINIMUM TO CURE PRIOR TO BACKFILL. PROVIDE BRACING AND/ OR FLOOR FRAMING BEFORE BACKFILLING FOUNDATION WALL.
10. CONCRETE SLABS SHALL BE PROTECTED FROM LOSS OF SURFACE MOISTURE FOR NOT LESS THAN 7 DAYS BY USING A CURING COMPOUND CONFORMING TO ASTM C-309 OR BY WET BURLAP OR A PLASTIC MEMBRANE.
11. LAP CONTINUOUS REINFORCING BARS WITH CLASS B LAP SPLICE ACCORDING TO CONCRETE LAP SPLICE SCHEDULE UNDER REINFORCED CONCRETE NOTES. HOOK DISCONTINUOUS ENDS OF ALL TOP BARS WITH ACI STANDARD HOOKS. REINFORCING COVER SHALL BE AS FOLLOWS:
    CONCRETE CAST AGAINST AND PERMANENTLY EXPOSED TO EARTH (EXCEPT SLABS)...3"
    CONCRETE EXPOSED TO EARTH OR WEATHER BUT PLACED IN FORMS..... 2"
    CONCRETE SLABS..... IN CENTER OF SLAB
12. WATERPROOFING SHALL BE PLACED BETWEEN SOIL & CONCRETE WHEREVER SOIL IS USED AS A FORM FOR CONCRETE, EXCEPT FOR FOOTINGS.
13. PLUMBING INSTALLED PARALLEL TO FOOTINGS SHALL BE INSTALLED ABOVE A 45 DEGREE LINE EXTENDING FROM THE NEAREST BOTTOM EDGE OF THE FOOTING. INSTALLING PLUMBING LINES UNDERNEATH AND PARALLEL WITH CONTINUOUS FOOTINGS IS PROHIBITED.
14. WHERE PLUMBING RUNS BELOW AND PERPENDICULAR TO CONTINUOUS FOOTINGS, A PIPE SLEEVE SHALL BE PROVIDED THAT IS TWO PIPE SIZES GREATER THAN THE PIPE PASSING BELOW THE FOOTING. THE MINIMUM PIPE SLEEVE LENGTH SHALL BE THE WIDTH OF THE FOOTING PLUS 2 TIMES THE DEPTH OF THE PLUMBING LINE BELOW THE BOTTOM OF THE FOOTING. SPRAYED ON FOAM MAY BE USED IN LIEU OF A PIPE SLEEVE AND SHALL BE AT LEAST AS LARGE AS THE REQUIRED PIPE SLEEVE SIZE AND LENGTH.
15. INSTALLING PLUMBING UNDERNEATH SPOT FOOTINGS IS PROHIBITED. SPOT FOOTINGS ELEVATIONS SHALL BE LOWERED TO KEEP PLUMBING ABOVE TOP OF SPOT FOOTINGS.
16. VERTICAL PLUMBING PENETRATIONS THROUGH CONTINUOUS FOOTINGS AND SLABS SHALL BE PROVIDED WITH A PIPE SLEEVE TWO PIPE SIZES GREATER THAN THE PIPE PASSING THROUGH THE FOOTING. SPRAYED ON FOAM MAY BE USED IN LIEU OF A PIPE SLEEVE AND SHALL BE AT LEAST AS LARGE AS THE REQUIRED PIPE SLEEVE SIZE.
17. HORIZONTAL PLUMBING PENETRATIONS THROUGH SPOT FOOTINGS ARE PROHIBITED. SPOT FOOTING ELEVATIONS MUST BE LOWERED TO KEEP PLUMBING ABOVE FOOTINGS WHERE POSSIBLE. HORIZONTAL PLUMBING PENETRATIONS IN CONTINUOUS FOOTINGS MUST BE APPROVED BY THE ENGINEER OF RECORD.
18. ANY PIPE THAT PASSES THROUGH A FOUNDATION WALL SHALL BE PROVIDED WITH A RELIEVING ARCH, OR A PIPE SLEEVE PIPE SHALL BE BUILT INTO THE FOUNDATION WALL. THE SLEEVE SHALL BE TWO PIPE SIZES GREATER THAN THE PIPE PASSING THROUGH THE WALL. SPRAYED ON FOAM MAY BE MAY BE USED IN LIEU OF A PIPE SLEEVE SO LONG AS THE FOAM IS AT LEAST AS LARGE AS THE REQUIRED PIPE SLEEVE SIZE.
19. ALL REINFORCING SHOWN TO BE HOOKED SHALL HAVE STANDARD ACI HOOKS.
20. PLACE CRACK CONTROL JOINTS BY SAW CUTTING @ 1/4" WIDE x 1 1/4" DEEP WHERE SHOWN. CUTTING TO BE PERFORMED WITHIN 24 HOURS OF CONCRETE PLACEMENT.
21. CONCRETE SLABS SHALL BE PLACED AND FINISHED WITHIN A TOLERANCE OF 1/8 INCH IN EVERY 10 FEET, AS DETERMINED BY PLACING A 10 FOOT STRAIGHT EDGE ON THE SLAB IN ANY DIRECTION. ANY DEVIATION FROM THIS WHICH REQUIRES ADDITIONAL CUTTING OF OTHER BUILDING COMPONENTS SHALL BE THE RESPONSIBILITY OF THE CONCRETE CONTRACTOR.
22. COMPACT CLEAN INTERIOR SAND FILL HAVING LESS THAN 10% FINES TO 95% OF MODIFIED PROCTOR MAXIMUM DRY DENSITY, ASTM D 1557 AT OPTIMUM MOISTURE CONTENT. SOIL COMPACTION SHALL BE FIELD CONTROLLED BY QUALIFIED LABORATORY OR SOILS ENGINEER, APPROVED BY STRUCTURAL ENGINEER.
23. CAST IN ANCHOR BOLTS AND POST INSTALLED THREADED RODS EPOXIED INTO CONCRETE SHALL BE ASTM F1554 GR. 36.
24. ALL LANDSCAPING AROUND THE HOME MUST BE GRADED AWAY FROM THE HOME AT A MINIMUM GRADE OF 5% FOR THE FIRST 10 FEET OR AS FAR AS POSSIBLE TO MINIMIZE WATER INFILTRATION INTO THE SUBGRADE.

COLD FORMED STEEL

1. ALL COLD FORMED STEEL FRAMING SHALL CONFORM TO THE LATEST EDITIONS OF THE AMERICAN IRON AND STEEL INSTITUTE, NORTH AMERICAN SPECIFICATION. ALL FRAMING SHALL BE OF THE SIZE AND THICKNESS SHOWN ON THE CONSTRUCTION DRAWINGS.
2. ALL MEMBERS SHALL BE COLD FORMED FROM ASTM A653/653 M GALVANIZED STRUCTURAL QUALITY SHEET STEEL WITH MINIMUM YIELD STRENGTH AS FOLLOWS:
   MATERIAL 0.054" AND THINNER .....Fy = 33 KSI (Fu = 45 KSI)
   MATERIAL THICKER THAN 0.054".....Fy = 50 KSI (Fu = 65 KSI)
3. ALL MEMBERS SHALL BE MARKED SO THAT SUPPLIED MATERIALS CAN BE FIELD VERIFIED.
4. MILL CERTIFICATION SIGNED BY FRAMING MEMBER/ACCESSORY MANUFACTURER CERTIFYING COMPLIANCE WITH MATERIAL REQUIREMENTS.
5. MANUFACTURERS OF COLD FORMED METAL FRAMING MEMBERS SHALL HAVE A MINIMUM OF 5 YEARS EXPERIENCE IN PRODUCING THE PRODUCTS OF THE TYPE SPECIFIED IN THESE CONSTRUCTION DRAWINGS. INSTALLERS SHALL HAVE A MINIMUM OF THREE YEARS EXPERIENCE.
6. INSTALL COLD-FORMED METAL FRAMING PLUMB, SQUARE, TRUE TO LINE AND SECURELY FASTENED AS INDICATED IN THE CONSTRUCTION DRAWINGS. VARIATION FROM PLUMB, LEVEL, AND TRUE TO LINE SHALL NOT EXCEED 1/8" IN 10'-0". MEMBER SPACING SHALL NOT VARY MORE THAN 1/8" PLUS OR MINUS FROM THE SPACING INDICATED ON THE CONSTRUCTION DRAWINGS.
7. BEARING SURFACES MUST BE FREE OF ALL DEFECTS WITH ANY GAP BETWEEN THE TRACK AND BEARING SURFACE NOT TO EXCEED 1/4".
8. FOLLOW MANUFACTURER'S INSTALLATION INSTRUCTIONS. IF INSTALLATION INSTRUCTIONS CONFLICT WITH THESE SPECIFICATIONS OR DRAWINGS, THESE SPECIFICATIONS AND DRAWINGS SHALL GOVERN.
9. ALL FRAMING MEMBERS SHALL BE CUT BY SHEARING OR SAWING ONLY.
10. INSTALL ALL MEMBERS IN SINGLE PIECE LENGTHS EXCEPT AS SHOWN ON THE CONSTRUCTION DRAWINGS OR BY APPROVAL BY THE ENGINEER OF RECORD. TRACKS MAY BE SPLICED, BUTT WELDED, OR EACH LENGTH ANCHORED TO A COMMON FRAMING ELEMENT.
11. CLEAN ALL DAMAGED SURFACES AND COATINGS. TOUCH UP FIELD WELDS AND DAMAGED GALVANIZED SURFACES WITH GALVANIZING REPAIR COMPOUND.
12. INSTALL SUPPLEMENTARY FRAMING OR BLOCKING TO SUPPORT WORK ATTACHED TO FRAMING. WHERE TYPE OF SUPPORT IS NOT SHOWN, COMPLY WITH INDUSTRY STANDARDS.
13. INSTALL ALL FRAMING ACCESSORIES (MECHANICAL CONNECTORS, ETC.) AS REQUIRED BY THE CONSTRUCTION DOCUMENTS. PROVIDE APPROPRIATE FASTENERS IN ALL PREDRILLED HOLES BACKED BY ANOTHER FRAMING MEMBER.
14. INSTALL STUDS OF SIZE AND SPACING AS SHOWN ON DRAWINGS, AT EACH SIDE OF OPENINGS, AND NOT MORE THAN 2" FROM ABUTTING WALLS. FRAME ALL CORNERS WITH A MINIMUM OF THREE STUDS. FRAME WALL OPENINGS WIDER THAN STUD SPACING WITH DOUBLE STUDS AT EACH JAMB.
15. TRACKS SHALL BE, THE SAME DESIGNATION, GRADE, COATING, AND THICKNESS AS STUDS, CHANNEL SHAPED WITH SOLID WEB UNLESS OTHERWISE NOTED. SECURE BOTTOM AND TOP TRACKS IN PLACE AS REQUIRED BY STRUCTURAL DRAWINGS.
16. BRIDGING SHALL BE CHANNEL SHAPED WITH LIPPED FLANGES AND INTEGRAL FORMED CLIPS WITH A MINIMUM THICKNESS OF 0.033" OR COLD ROLLED CHANNEL 1-1/2" X 1/2" BY 0.056". INSTALL BRIDGING AS SHOWN IN CONSTRUCTION DRAWINGS.
17. ALL SCREWS SHALL BE CORROSION RESISTANT COATED, SELF DRILLING, SELF TAPPING, PAN OR HEX WASHER HEAD. PROVIDE SCREW TYPE AND SIZE AS REQUIRED BY CONSTRUCTION DRAWINGS.
18. ALL ANCHOR BOLTS AND STUDS SHALL BE CONFORM TO ASTM A307, GRADE A, CARBON STEEL, WITH HEX HEAD CARBON STEEL NUTS AND FLAT STEEL WASHERS. HOT-DIP ZINC COATED IN ACCORDANCE WITH ASTM A153. PROVIDE BOLT OR STUD TYPE AND SIZE AS INDICATED IN CONSTRUCTION DRAWINGS. ALL SUBSTITUTIONS SHALL BE APPROVED IN ADVANCE BY THE ENGINEER OF RECORD.
19. POWDER ACTUATED FASTENERS SHALL CONFORM TO FEDERAL SPECIFICATION FF-P-395b. MANUFACTURED FROM AISI 1062 OR 1065 STEEL, AUSTEMPERED TO A MINIMUM CORE HARDNESS OF 50 TO 54 HRC AND ZINC PLATED IN ACCORDANCE WITH ASTM B633. PROVIDE FASTENERS OF THE SIZE AND DIAMETER INDICATED IN THE CONSTRUCTION DRAWINGS. ALL SUBSTITUTIONS SHALL BE APPROVED IN ADVANCE BY THE ENGINEER OF RECORD.
20. WELDING SHALL BE IN CONFORMANCE WITH AWS D 1.1 "STRUCTURAL WELDING CODE - STEEL", AND AWS D1.3 "STRUCTURAL WELDING CODE - SHEET STEEL" UTILIZING E70XX ELECTRODES AND SHALL BE PERFORMED BY WELDERS WITH CURRENT AWS CERTIFICATES. THE ENGINEER OF RECORD MAY REQUEST NON-DESTRUCTIVE TEST TO VERIFY PROPER WELDS.

STATEMENT OF SPECIAL INSPECTION

1. ALL SPECIAL INSPECTION REPORTS, TESTS, QUALIFICATIONS, AND CERTIFICATES OF COMPLIANCE SHALL BE APPROVED BY THE ENGINEER OF RECORD AND SUBMITTED TO THE CITY BUILDING DEPARTMENT PRIOR TO CONSTRUCTION.
2. CONTRACTORS MUST SUBMIT A WRITTEN STATEMENT OF RESPONSIBILITY PER IBC 2018 SECTION 1704.4. CONTRACTOR IS REQUIRED TO FOLLOW QUALITY ASSURANCE PLAN PER IBC 2018 SECTION 1704.3.1.
3. IT IS THE CONTRACTORS SOLE RESPONSIBILITY TO SEE THAT THE TEST AND INSPECTIONS ARE PERFORMED. JOB SITE VISITS BY THE ENGINEER OF RECORD DO NOT CONSTITUTE AND ARE NOT A SUBSTITUTE FOR SPECIAL INSPECTIONS.
4. CONTRACTOR SHALL PROVIDE NAME OF APPROVED SPECIAL INSPECTION AGENCY AND QUALIFICATION OF INDIVIDUAL TO BUILDING OFFICIAL FOR APPROVAL PRIOR TO CONSTRUCTION.
5. THE FOLLOWING SPECIAL INSPECTIONS ARE REQUIRED BY THE CURRENT EDITION OF THE IBC:

SOILS - IBC 1705.6 AND TABLE 1705.6

TYPE	CONTINUOUS SPECIAL INSPECTION	PERIODIC SPECIAL INSPECTION
VERIFY MATERIALS BELOW SHALLOW FOUNDATIONS ARE ADEQUATE TO ACHIEVE THE DESIGN BEARING CAPACITY	-	X
VERIFY EXCAVATIONS ARE EXTENDED TO PROPER DEPTH AND HAVE REACHED PROPER MATERIAL	-	X
PERFORM CLASSIFICATION AND TESTING OF COMPACTED FILL MATERIALS	-	X
VERIFY USE OF PROPER MATERIALS, DENSITIES AND LIFT THICKNESSES DURING PLACEMENT AND COMPACTION OF COMPACTED FILL	X	-
PRIOR TO PLACEMENT OF COMPACTED FILL; INSPECT SUB-GRADE AND VERIFY THAT SITE HAS BEEN PREPARED PROPERLY	-	X

REINFORCED MASONRY TMS 602-16 TABLE 4

INSPECTION TASK	FREQUENCY			REFERENCE FOR CRITERIA	
	LEVEL 1	LEVEL 2	LEVEL 3	TMS 402	TMS 602
1. AS MASONRY CONSTRUCTION BEGINS, VERIFY THAT THE FOLLOWING ARE IN COMPLIANCE:					
A. PROPORTIONS OF SITE-PREPARED MORTAR	NR	P	P		ART. 2.1, 2.6 A, & 2.6 C
B. GRADE AND SIZE OF PRESTRESSING AND ANCHORAGES	NR	P	P		ART. 2.4 B, & 2.4 H
C. GRADE, TYPE AND SIZE OF REINFORCEMENT, CONNECTORS, ANCHOR BOLTS, AND PRESTRESSING TENDONS AND ANCHORAGES	NR	P	P		ART. 3.4 B, & 3.6 A
D. PRESTRESSING TECHNIQUE	NR	P	P		ART. 3.6 B
E. PROPERTIES OF THIN-BED MORTAR FOR AAC MASONRY	NR	C[b],P[c]	C		ART. 2.1 C.1
F. SAMPLE PANEL CONSTRUCTION	NR	P	C		ART. 1.6 D
2. PRIOR TO GROUTING, VERIFY THAT FOLLOWING ARE IN COMPLIANCE:					
A. GROUT SPACE	NR	P	C		ART. 3.2 D & 3.2 F
B. PLACEMENT OF PRESTRESSING TENDONS AND ANCHORAGES	NR	P	P	SEC. 10.8 & 10.9	ART. 2.4 & 3.6
C. PLACEMENT OF REINFORCEMENT, CONNECTORS AND ANCHOR BOLTS	NR	P	C	SEC. 6.1 6.3.1, 6.3.6, & 6.3.7	ART. 3.2 E & 3.4
D. PROPORTIONS OF SITE-PREPARED GROUT AND PRESTRESSING GROUT FOR BONDED TENDONS	NR	P	P		ART. 2.6 B & 2.4 G.1.b
3. VERIFY COMPLIANCE OF THE FOLLOWING DURING CONSTRUCTION:					
A. MATERIALS AND PROCEDURES WITH THE APPROVED SUBMITTALS	NR	P	P		ART. 1.5
B. PLACEMENT OF MASONRY UNITS AND MORTAR JOINT CONSTRUCTION	NR	P	P		ART. 3.3 B
C. SIZE AND LOCATION OF STRUCTURAL MEMBERS	NR	P	P		ART. 3.3 F
D. TYPE, SIZE, AND LOCATION OF ANCHORS, INCLUDING OTHER DETAILS OF ANCHORAGE OF MASONRY TO STRUCTURAL MEMBERS, FRAMES, OR OTHER CONSTRUCTION	NR	P	C	SEC. 1.2.1(e), 6.2.1, & 6.3.1	
E. WELDING OF REINFORCEMENT	NR	C	C	SEC. 6.1.6.1.2	
F. PREPARING, CONSTRUCTION, AND PROTECTION OF MASONRY DURING COLD WEATHER (TEMPERATURE BELOW 40°F (4.4°C)) OR HOT WEATHER (TEMPERATURE ABOVE 90°F (32.2°C))	NR	P	P		ART. 1.8 C & 1.8 D
G. APPLICATION AND MEASUREMENT OF PRESTRESSING FORCE	NR	C	C		ART. 3.6 B
H. PLACEMENT OF GROUP AND PRESTRESING GROUP FOR BONDED TENDONS IS IN COMPLIANCE	NR	C	C		ART. 3.5 & 3.6 C
H. PLACEMENT OF AAC MASONRY UNITS AND CONSTRUCTION OF THIN-BED MORTAR JOINTS	NR	C[b],P[c]	C		ART. 3.3 B.9 & 3.3 F.1.b
4. OBSERVE PREPARATION OF GROUT SPECIMENS, MORTAR SPECIMENS, AND/OR PRIMS	NR	P	C		ART. 1.4 B.2.a.3, 1.4 B.2.b.3, 1.4 B.2.c.3, 1.4 B.3, & 1.4 B.4

(a) FREQUENCY REFERS TO THE FREQUENCY OF INSPECTION, WHICH MAY BE CONTINUOUS DURNING THE LISTED TASK, AS DEFINED IN THE TABLE. NR=NOT REQUIRED. P=PERIODIC, C=CONTINUOUS
(b) REQUIRED FIRST 5000 SQUARE FEET (465 SQUARE METERS) OF AAC MASONRY.
(c) REQUIRED AFTER FIRST 5000 SQUARE FEET (465 SQUARE METERS) OF AAC MASONRY.

STRUCTURAL SHEET INDEX

S0.0	PROJECT NOTES & SPECIFICATIONS	S5.0	STRUCTURAL DETAILS
S1.0	TYPICAL STRUCTURAL DETAILS	S5.1	STRUCTURAL DETAILS
S2.0	FOUNDATION PLAN		
S3.0	SHEET NOT USED		
S4.0	ROOF FRAMING PLAN		

STRUCTURAL DESIGN CRITERIA - IBC 2018

ANALYSIS ITEMS

GRAVITY LOADS
- ROOF DEAD: 60 PSF
- ROOF LIVE: 20 PSF
- RAIN INTENSITY, i = 1.75 IN/HR

DEFLECTION CRITERIA
- ROOF MEMBERS
  - Δ(LIVE) L/360
  - Δ(TOTAL LOAD) L/240
- WALLS
  - Δ(LIVE) L/240

WIND DESIGN PARAMETERS
- ULTIMATE WIND SPEED, Vnlt: 100 MPH (Vasd = 82 MPH)
- EXPOSURE: "B"
- HT. AND EXPOSURE COEFF., **λ** : 1.00
- RISK CATEGORY: II
- COMPONENTS & CLADDING DESIGN WIND LOADS TO BE PER ASCE 7-16

SEISMIC DESIGN PARAMETERS
- SEISMIC DESIGN CATEGORY: D
- SITE CLASS: D
- RISK CATEGORY: II
- IMPORTANCE FACTOR, Ie: 1.00
- RESPONSE MOD. FACTOR, R: 5.0
- OVER STRENGTH FACTOR, Ω: 2.5
- DEFLECTION AMPLIFICATION FACTOR, Cd: 3.5
- BASIC SIESMIC-FORCE-RESISTING SYSTEM(S): SPECIAL REINFORCED MASONRY SHEAR WALLS
- DESIGN BASE SHEAR, V: CsW
- SEISMIC DESIGN COEFFICIENT, Cs: 0.0984
- ANALYSIS PROCEDURE USED: EQUIVALENT LATERAL FORCE
- Ss: 0.539
- S1: 0.178
- Sm1: 0.266
- Sds: 0.492

GENERAL NOTES

1. CONTRACTOR TO VERIFY ALL DIMENSIONS, SPANS, AND CONDITIONS WITH ARCHITECTURAL DRAWINGS. IF ANY OMISSIONS, MISTAKES, OR DISCREPANCIES ARE FOUND TO EXIST WITHIN THE CONSTRUCTION DRAWINGS, THE ENGINEER SHALL BE PROMPTLY NOTIFIED SO THAT HE MAY HAVE THE OPPORTUNITY TO TAKE WHATEVER STEPS NECESSARY TO RESOLVE THEM. FAILURE TO PROMPTLY NOTIFY THE ENGINEER OF SUCH CONDITIONS SHALL ABSOLVE THE ENGINEER FROM ANY RESPONSIBILITY FOR THE CONSEQUENCES OF SUCH A FAILURE.
2. IF DISCREPANCIES ARE FOUND, THE MORE STRINGENT SPECIFICATION SHALL BE FOLLOWED.CONTRACTOR RESPONSIBLE FOR ADEQUATE BRACING OF STRUCTURAL MEMBERS, WALLS, AND NON-STRUCTURAL ITEMS DURING CONSTRUCTION.
3. THE ENGINEER AND HIS CONSULTANTS DO NOT WARRANT OR GUARANTEE THE ACCURACY AND COMPLETENESS OF THE WORK HERE IN BEYOND A REASONABLE DILIGENCE. IF ANY OMISSIONS, MISTAKES, OR DISCREPANCIES ARE FOUND TO EXIST WITHIN THE WORK PRODUCT, THE ENGINEER SHALL BE PROMPTLY NOTIFIED SO THAT HE MAY HAVE THE OPPORTUNITY TO TAKE WHATEVER STEPS NECESSARY TO RESOLVE THEM. FAILURE TO PROMPTLY NOTIFY THE ENGINEER OF SUCH CONDITIONS SHALL ABSOLVE THE ENGINEER FROM ANY RESPONSIBILITY FOR THE CONSEQUENCES OF SUCH A FAILURE.
4. MANY PORTIONS OF THESE DRAWINGS, NOTES AND SPECIFICATIONS ARE THE RESULT OF DEMANDS BY VARIOUS APPROVING AGENCIES THAT MUST BE PERFORMED AS PART OF THIS WORK. ANY ACTIONS TAKEN WITHOUT THE KNOWLEDGE AND CONSENT OF THE ENGINEER SHALL BECOME THE RESPONSIBILITY NOT OF THE ENGINEER, BUT OF THE PARTIES RESPONSIBLE FOR MAKING THE CHANGE AND TAKING ACTION TO DO SO. ACTIONS TAKEN WITHOUT THE KNOWLEDGE AND CONSENT OF THE ENGINEER OR THE CONTRADICTION TO THE ENGINEER'S WORK PRODUCT, THE INTENT, AND/OR RECOMMENDATIONS, SHALL BECOME THE RESPONSIBILITY NOT OF THE ENGINEER, BUT OF THE PARTIES RESPONSIBLE FOR TAKING SUCH ACTION. THE ENGINEER SHOULD BE CONTACTED IN MATTERS OF ANY AND ALL CHANGES TO THE DRAWINGS AND SPECIFICATIONS HEREIN WITHOUT EXCEPTION.
5. NON STRUCTURAL FRAMING REQUIREMENTS ARE NOT SPECIFIED ON STRUCTURAL DRAWINGS. SEE ARCHITECTURAL DRAWINGS FOR ANY ADDITIONAL FRAMING REQUIRED.
6. CONTRACTOR SHALL ASSURE THAT ALL PRODUCTS AND HARDWARE ARE USED PER MANUFACTURER'S RECOMMENDATIONS.

POST INSTALLED ANCHORS

1. POST INSTALLED ANCHORS REQUIRE SPECIAL INSPECTION AS STATED IN THE STATEMENT OF SPECIAL INSPECTIONS SECTION. COPIES OF SPECIAL INSPECTION REPORTS SHALL BE SUBMITTED TO THE ENGINEER OF RECORD FOR APPROVAL.
2. POST INSTALLED ANCHORS SHALL BE AS FOLLOWS:
   A. INSTALLED IN CONCRETE
      - SIMPSON TITEN HD (3/8", 1/2", AND 3/4" DIAMETERS)
      - SIMPSON STRONG-BOLT
      - HILTI KWIK BOLT TZ
      - SIMPSON SET-XP EPOXY
      - HILTI HIT-RE 500-SD EPOXY
   B. INSTALLED IN MASONRY
      - HILTI KWIK BOLT 3
      - SIMPSON TITEN HD
      - SIMPSON WEDGE-ALL
3. INSTALLATION AND MIN. EMBEDMENT SHALL BE IN ACCORDANCE WITH SPECS. OR AS SPECIFIED ON DRAWINGS, WHICH EVER IS GREATER.
4. CONTRACTOR TO FOLLOW MANUFACTURERS REQUIREMENTS FOR INSTALLATION OF EXPANSION ANCHORS INCLUDING DRILL BIT DIAMETER, DRILLED HOLE DEPTH, MINIMUM EDGE DISTANCE AND MINIMUM SPACING REQUIREMENTS.
5. WHERE ANCHOR BOLTS ARE SET IN MASONRY WALLS, FILL BLOCK CELLS WITH CONCRETE FOR BOLTED COURSE AND ONE COURSE BELOW ANCHOR ELEVATION.

Jeffrey M Hedman
Digitally signed by Jeffrey M Hedman
Date: 2025.01.07 14:35:07 -07'00'

JEFF HEDMAN, PE
216 WST GEORGE BOULEVARD SUITE 201, LVT 64770
PH: 435-313-4162 EMAIL: jeff@hedmanengineering.com

ALL DRAWINGS AND SPECIFICATIONS ISSUED AS PART OF THE SERVICES RENDERED BY JEFF HEDMAN, PE FOR THIS PROJECT SHALL REMAIN THE PROPERTY OF JEFF HEDMAN, PE. ANY DUPLICATION OF THE DRAWINGS AND/OR SPECIFICATIONS BY ANY METHOD WHATSOEVER, IN WHOLE OR IN PART, WITHOUT THE WRITTEN C

10
S1.0

NOTES:
1. STEEL BEAM PER FRAMING PLAN
2. TRACK TO MATCH WIDTH AND GAUGE OF STEEL STUD PER PLAN
3. STEEL STUD FRAMING PER PLAN
4. TRIMMERS PER FRAMING PLAN
5. HEADER PER FRAMING PLAN
6. CRIPPLE STUDS PER FRAMING PLAN
7. KING STUDS, REFER TO COLD FORMED STEEL NOTES AND FRAMING PLAN
8. ANCHOR BOLTS PER FOUNDATION

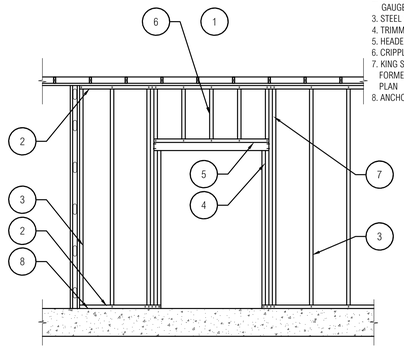

OPENING IN SINGLE STORY STEEL STUD FRAMED WALL

7 S1.0 SCALE:NTS

NOTES:
1. 2 - #5 BARS VERTICAL AT INTERSECTION
2. CONCRETE WALL, SEE PLAN AND SCHEDULE
3. CORNER BAR(S)
4. BEND NORMAL WALL REINFORCING OR PROVIDE BAR OF SAME SIZE AND SPACING WITH LAP

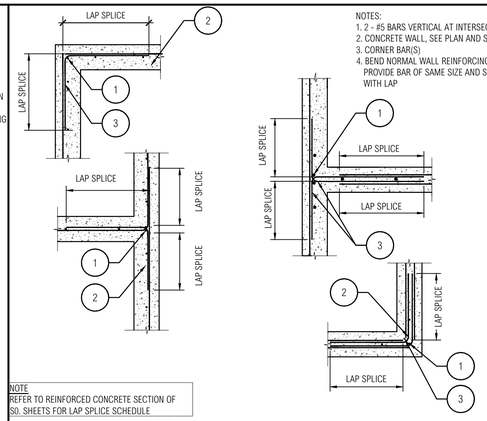

NOTE
REFER TO REINFORCED CONCRETE SECTION OF S0. SHEETS FOR LAP SPLICE SCHEDULE

CONCRETE CORNERS & INTERSECTIONS

4 S1.0 SCALE: NTS

NOTES:
1. 2 - #5 BAR VERTICAL AT CORNER
2. 2 - #5 BARS VERTICAL AT INTERSECTION
3. MASONRY WALL, PER PLAN
4. BEND NORMAL WALL REINFORCING OR PROVIDE BAR OF SAME SIZE AND SPACING WITH LAP

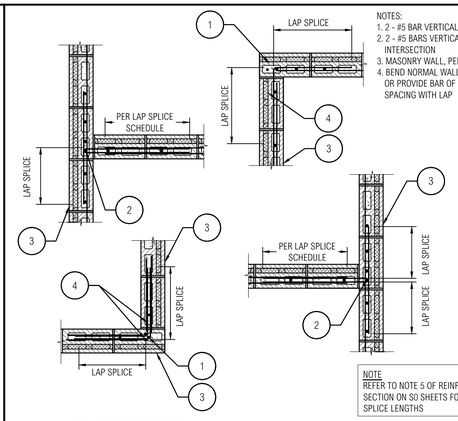

NOTE
REFER TO NOTE 5 OF REINFORCED MASONRY SECTION ON S0 SHEETS FOR REQUIRED LAP SPLICE LENGTHS

OMNIBLOCK CORNERS & INTERSECTIONS

1 S1.0 SCALE: NTS

11
S1.0

NOTES:
1. BUTT TRACK AND ATTACH WITH STRAP
2. STRAP ATTACHMENT, 20 GAUGE PLATE, WITH 4- #10 SCREWS EACH END. MATCH WALL THICKNESS
3. TOP TRACK PER PLAN
4. LIGHT GAUGE STEEL STUDS PER PLAN
5. GYP. BOARD OR SHEATHING PER PLAN

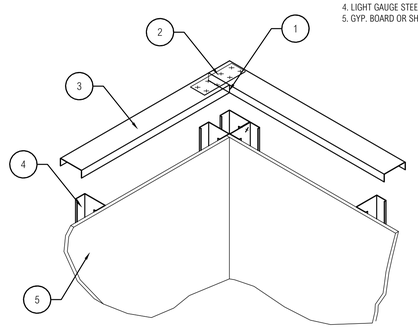

STEEL STUD FRAMED WALL CORNER BRACING

8 S1.0 SCALE:NTS

NOTES:
1. END CELL REINFORCING PER MASONRY WALL SCHEDULE
2. VERTICAL REBAR PER MASONRY WALL SCHEDULE
3. LINTEL REINFORCEMENT PER LINTEL SCHEDULE
4. HORIZONTAL REBAR PER MASONRY WALL SCHEDULE
5. EXTEND LINTEL REINFORCING FULL WIDTH OF WALL
6. CONT. REINFORCING FULL WIDTH OF WALL
7. HOOK DISCONTINUOUS HORZ. BARS AROUND LAST VERTICAL BAR W/ ACI STANDARD 180° HOOK TYPICAL
8. OPENING IN MASONRY WALL

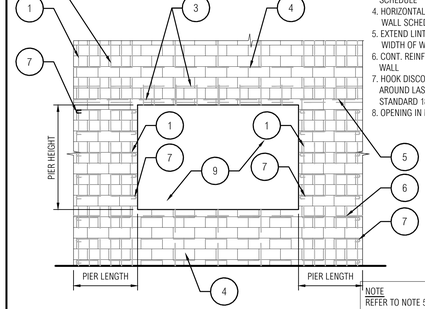

NOTE
REFER TO NOTE 5 OF REINFORCED MASONRY SECTION ON S0 SHEETS FOR REQUIRED LAP SPLICE LENGTHS

FORCE TRANSFER MASONRY SHEAR WALL

5 S1.0 SCALE: NTS

NOTES:
1. LINTEL BOTTOM REBAR PER LINTEL BEAM SCHEDULE
2. LINTEL TOP REBAR PER LINTEL BEAM SCHEDULE
3. LENGTH OF STIRRUPS PER SCHEDULE
4. FIRST STIRRUP @ 1/2 REQUIRED SPACING
5. LINTEL STIRRUPS PER LINTEL SCHEDULE
6. REFER TO MASONRY WALL SCHEDULE FOR VERTICAL REBAR SIZE & SPACING
7. SOLID GROUTED LINTEL PER PLAN
8. DOOR OR WINDOW OPENING

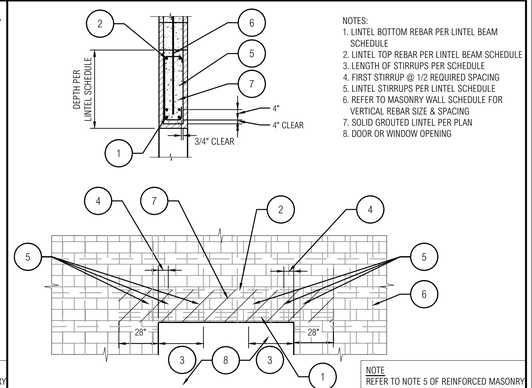

NOTE
REFER TO NOTE 5 OF REINFORCED MASONRY SECTION ON S0 SHEETS FOR REQUIRED LAP SPLICE LENGTHS

MASONRY LINTEL

2 S1.0 SCALE: NTS

12
S1.0

NOTES:
1. LIGHT GAUGE STEEL STUD, REFER TO PLAN FOR SIZE AND SPACING PLAN
2. CLIP ANGLE W/ (3) #8 SCREWS EACH LEG
3. (4) #8 SCREWS TO EACH BLOCK
4. #8 SCREWS BOTH SIDES OF EACH STUD
5. CONTINUOUS SOLID BLOCKING, EVERY 8' O.C UNLESS NOTED OTHERWISE

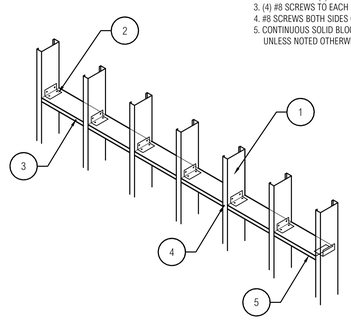

STEEL STUD FRAMED WALL BRACING

9 S1.0 SCALE:NTS

D = 5d FOR #3 - #8
D = 8d FOR #9 - #11
D = 10d FOR #14 - #18

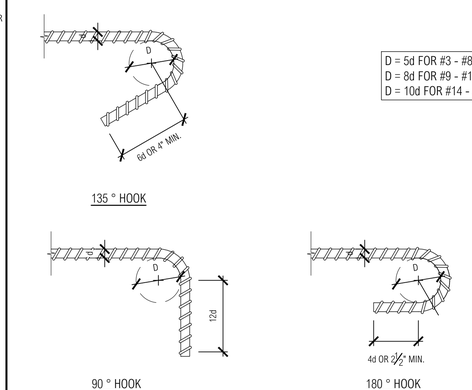

STANDARD ACI HOOKS

6 S1.0 SCALE:NTS

NOTES:
1. HORIZONTAL REBAR PER MASONRY WALL SCHEDULE
2. LINTEL REINFORCEMENT PER LINTEL SCHEDULE
3. VERTICAL REBAR PER MASONRY WALL SCHEDULE
4. END CELL REINFORCING PER MASONRY WALL SCHEDULE
5. HOOK DISCONTINUOUS HORZ. BARS AROUND LAST VERTICAL BAR W/ ACI STANDARD 180° HOOK TYPICAL
6. OPENING IN MASONRY

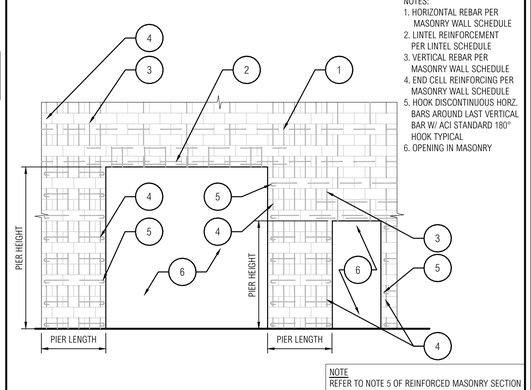

NOTE
REFER TO NOTE 5 OF REINFORCED MASONRY SECTION ON S0 SHEETS FOR REQUIRED LAP SPLICE LENGTHS

OPENING IN MASONRY WALL

3 S1.0 SCALE: NTS

JEFF HEDMAN, PE
216 WST GEORGE BOULEVARD SUITE 203, LIT 84770
PH: 435-313-4162 EMAIL: jeff@hedmanengineering.com

ALL DRAWINGS AND SPECIFICATIONS ISSUED AS A PART OF THE SERVICES RENDERED BY JEFF HEDMAN, PE FOR THIS PROJECT SHALL REMAIN THE PROPERTY OF JEFF HEDMAN, PE. ANY DUPLICATION OF THE DRAWINGS AND/OR SPECIFICATIONS FOR USE ON ANY OTHER PROJECT OR BY ANY OTHER PERSON OR ENTITY WITHOUT THE WRITTEN CONSENT OF JEFF HEDMAN, PE. ANY SUCH UNAUTHORIZED USE BY OTHERS, IS STRICTLY PROHIBITED WITHOUT THE WRITTEN CONSENT OF JEFF HEDMAN, PE

PROJECT NAME
APN 161-05-610-256
OMNIBLOCK MAD MAXX
MODEL #1675

PROJECT ADDRESS
IDAHO AVE. LAS VEGAS, NV

PROJECT NUMBER
24257

CLIENT
JAG DEVELOPMENT

NO.	REVISION
1	
2	
3	
4	
5	
6	
7	
8	
9	
10	
11	
12	

PROFESSIONAL ENGINEER - STATE OF NEVADA
JEFF HEDMAN
Exp: 06/30/25
CIVIL
No. 024589

DRAWN BY:
EAM

TITLE SHEET:
TYPICAL STRUCTURAL DETAILS

SHEET:
S1.0

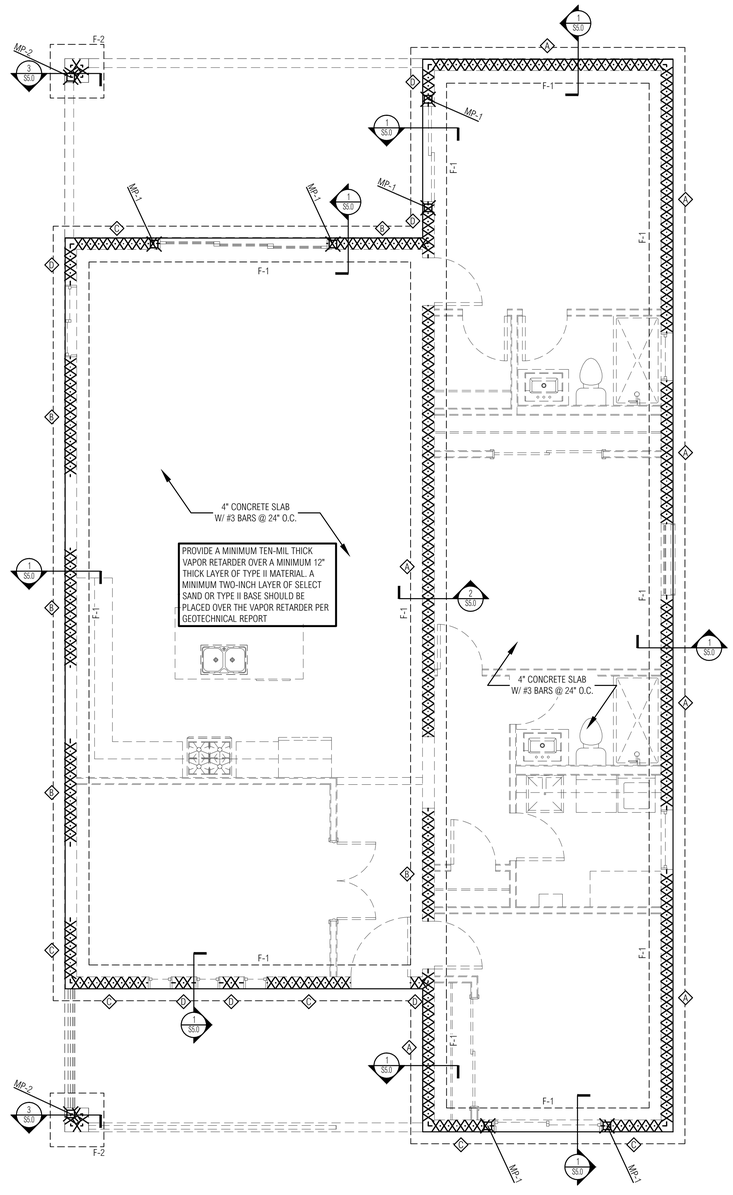

1 S2.0 FOUNDATION PLAN
SCALE: 1/4"=1'-0"

SYMBOL LEGEND

A	MASONRY WALL
	FOOTING
MP-1	MASONRY PILASTER

GENERAL NOTES

1. CONTRACTOR TO VERIFY ALL DIMENSIONS WITH ARCHITECTURAL PLANS AND NOTIFY ENGINEER OF RECORD OF ANY DISCREPANCIES, OMISSIONS , OR ERRORS BEFORE COMMENCING CONSTRUCTION.
2. REFER TO SHEET S0.10 FOR ALL CONCRETE, FOUNDATION, AND SUBGRADE SPECIFICATIONS
3. CONTRACTOR TO FOLLOW ALL SITE PREPERATIONS FROM SOILS REPORT
4. ALL LANDSCAPING AROUND THE HOME MUST BE GRADED AWAY FROM THE HOME AT A MINIMUM GRADE OF 5% FOR THE FIRST 10 FEET OR AS FAR AS POSSIBLE TO MINIMIZE WATER INFILTRATION INTO THE SUBGRADE

FOOTING SCHEDULE

MARK	FOOTING SIZE	REINFORCEMENT	FOOTING TYPE
F-1	24" X 10" X CONT.	(3) #4 BARS CONT.	CONTINUOUS
F-2	36" SQ. X 10"	(4) #4 BARS EA. WAY	SPOT

MASONRY WALL SCHEDULE

MARK	NOM WIDTH	GROUTING	VERT. REBAR	HORIZ. REBAR	END CELL REBAR
A	8"	PARTIAL	1 - #4 BAR @ 32" O.C.	1 - #4 BARS @ 40" O.C.	(2) - #5 BARS IN LAST CELL
B	8"	PARTIAL	1 - #4 BAR @ 24" O.C.	1 - #4 BAR @ 40" O.C.	(2) - #5 BARS IN LAST CELL
C	8"	PARTIAL	1 - #4 BAR @ 16" O.C.	1 - #4 BAR @ 40" O.C.	(2) - #5 BARS IN LAST CELL
D	8"	FULL	1 - #4 BAR @ 8" O.C.	1 - #4 BAR @ 40" O.C.	(2) - #5 BARS IN LAST CELL

1. REFER TO 1/S1.0, 3/S1.0, 5/S1.0 AND 6/S1.0 FOR WALL DETAILS
2. PARTIALLY GROUTED WALLS REQUIRED GROUTING IN WALL CELLS WITH REINFORCING. FULLY GROUTED WALLS REQUIRE GROUTING IN ALL CELLS

PILASTER SCHEDULE

MARK	NOM. DEPTH	NOM. WIDTH	VERTICAL REBAR	HORIZONTAL TIES & SPACING
MP-1	8"	16"	(4) #4 BARS	#2 TIES @ 8" O.C.
MP-2	16"	16"	(4) #4 BARS	#2 TIES @ 8" O.C.

JEFF HEDMAN, PE
216 W ST. GEORGE BOULEVARD SUITE 203, UT 84770
PH: 435-313-4162 EMAIL: jeff@hedmanengineering.com

ALL DRAWINGS AND SPECIFICATIONS ISSUED AS A PART OF THE SERVICES RENDERED BY JEFF HEDMAN, PE FOR THIS PROJECT SHALL REMAIN THE PROPERTY OF JEFF HEDMAN, PE AND DUPLICATION OF THE DRAWINGS AND/OR SPECIFICATIONS IN WHOLE OR IN PART FOR USE BY OTHERS THAN THE PROJECT SHALL BE PROHIBITED. THE DRAWINGS AND SPECIFICATIONS ARE TO BE USED FOR THIS PROJECT AND SHALL NOT BE USED FOR THE PROJECT OF ANY OTHER PERSON OR ANY OTHER PROJECT BY OTHERS, IS STRICTLY PROHIBITED WITHOUT THE WRITTEN CONSENT OF JEFF HEDMAN, PE.

PROJECT NAME
APN 161-05-610-256
OMNIBLOCK MAD MAXX
MODEL #1675

PROJECT ADDRESS
IDAHO AVE. LAS VEGAS, NV

PROJECT NUMBER
24257

CLIENT
JAG DEVELOPMENT

NO.	REVISION
1	
2	
3	
4	
5	
6	
7	
8	
9	
10	
11	
12	



DRAWN BY:
EAM

TITLE SHEET:
FOUNDATION PLAN

SHEET:
S2.0

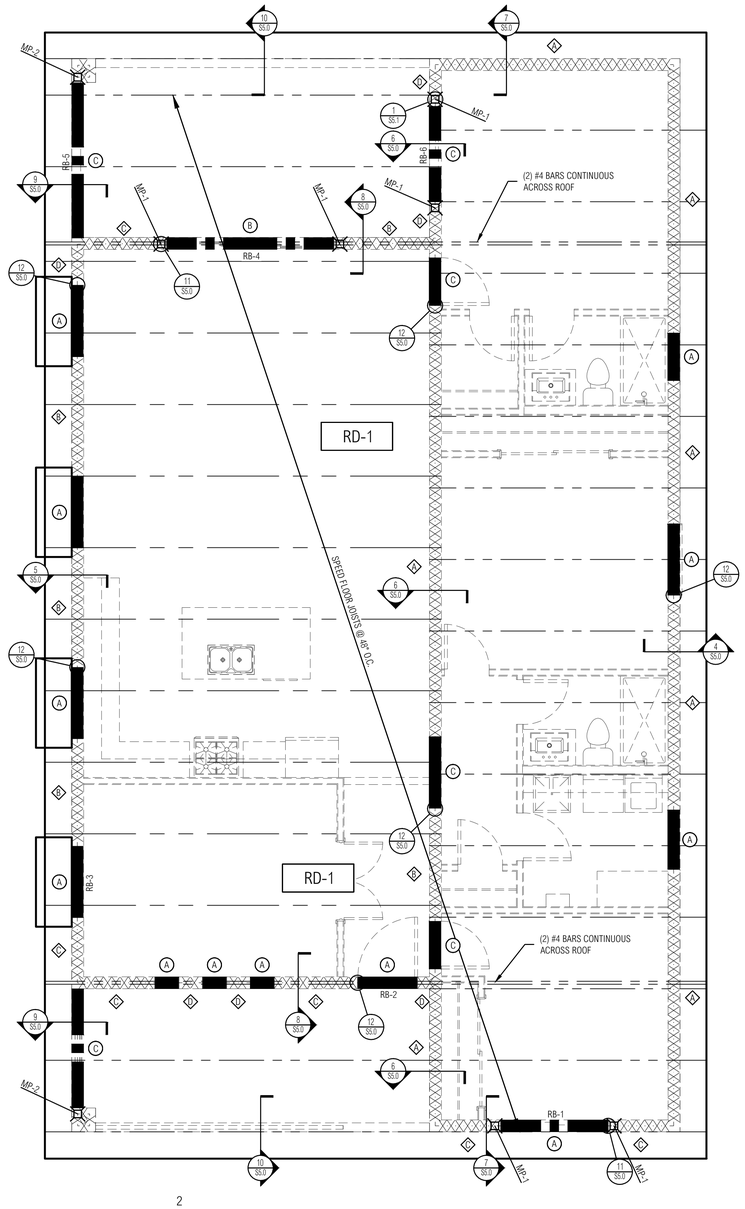

2

1 S4.0 ROOF FRAMING PLAN

SCALE: 1/4"=1'-0"

SYMBOL LEGEND

A	MASONRY WALL
	ROOF TRUSS / JOIST
RB-1	BEAM
MP-1	MASONRY PILASTER
E.N.	EDGE NAILING FULL LENGTH OF TRUSS

GENERAL NOTES

1. CONTRACTOR TO VERIFY ALL DIMENSIONS WITH ARCHITECTURAL PLANS AND NOTIFY ENGINEER OF RECORD OF ANY DISCREPANCIES, OMISSIONS , OR ERRORS BEFORE CONSTRUCTION.
2. REFER TO SHEET S0.10 FOR ALL GENERAL FRAMING AND MATERIAL SPECIFICATIONS.
3. SEE ARCHITECTURAL PLANS FOR ANY ADDITIONAL DIMENSIONS
4. CONTRACTOR TO FOLLOW ALL SITE PREPARATIONS FROM SOILS REPORT.
5. ENGINEERED TRUSS MANUFACTURER TO COORDINATE MECHANICAL EQUIPMENT LOCATIONS WITH MECHANICAL DRAWINGS
6. ALL SHOP DRAWINGS TO BE REVIEWED AND APPROVED BY HEDMAN ENGINEERING.
7. CONTRACTOR TO FOLLOW ALL SIMPSON INSTALLATION REQUIREMENTS.
8. REFER TO FRAMING NOTES FOR ADDITIONAL REQUIREMENTS

PILASTER SCHEDULE

MARK	NOM. DEPTH	NOM. WIDTH	VERTICAL REBAR	HORIZONTAL TIES & SPACING
MP-1	8"	16"	(4) #4 BARS	#2 TIES @ 8" O.C.
MP-2	16"	16"	(4) #4 BARS	#2 TIES @ 8" O.C.

MASONRY WALL SCHEDULE

MARK	NOM WIDTH	GROUTING	VERT. REBAR	HORIZ REBAR	END CELL REBAR
A	8"	PARTIAL	1 - #4 BAR @ 32" O.C.	1 - #4 BARS @ 40" O.C.	(2) - #5 BARS IN LAST CELL
B	8"	PARTIAL	1 - #4 BAR @ 24" O.C.	1 - #4 BAR @ 40" O.C.	(2) - #5 BARS IN LAST CELL
C	8"	PARTIAL	1 - #4 BAR @ 16" O.C.	1 - #4 BAR @ 40" O.C.	(2) - #5 BARS IN LAST CELL
D	8"	FULL	1 - #4 BAR @ 8" O.C.	1 - #4 BAR @ 40" O.C.	(2) - #5 BARS IN LAST CELL

1. REFER TO 1/S1.0, 3/S1.0, 5/S1.0 AND 6/S1.0 FOR WALL DETAILS
2. PARTIALLY GROUTED WALLS REQUIRED GROUTING IN WALL CELLS WITH REINFORCING. FULLY GROUTED WALLS REQUIRE GROUTING IN ALL CELLS

LINTEL SCHEDULE

LINTEL NUMBER	WIDTH	DEPTH	TOP REBAR	BOTTOM REBAR	STIRRUPS & SPACING
A	8"	16"	(1) #4 BARS	(1) #4 BARS	NOT REQUIRED
B	8"	16"	(2) #4 BARS	(2) #4 BARS	NOT REQUIRED
C	8"	24"	(2) #4 BARS	(2) #4 BARS	NOT REQUIRED

SEE DETAIL 2/S1.0 FOR CROSS SECTION

MARK	CONCRETE ROOF DIAPHRAGM
RD-1	5" CONCRETE SLAB (3-1/2" OVER THE TOP OF SPEEDFLOOR JOIST FIN) W/ #3 BARS @ 16" O.C. EA. WAY

JEFF HEDMAN, PE

216 W ST. GEORGE BOULEVARD SUITE 203, UT 84770
PH: 435-313-4162 EMAIL: jeff@hedmanengineering.com

ALL DRAWINGS AND SPECIFICATIONS ISSUED AS PART OF THE SERVICES RENDERED BY JEFF HEDMAN, PE FOR THIS PROJECT SHALL REMAIN THE PROPERTY OF JEFF HEDMAN, PE. ANY DUPLICATION OF THE DRAWINGS AND/OR SPECIFICATIONS IN WHOLE OR IN PART, OR USE OF THE DESIGNS SHOWN HEREIN ON ANY OTHER PROJECT BY OTHERS, IS STRICTLY PROHIBITED WITHOUT THE WRITTEN CONSENT OF JEFF HEDMAN, PE.

PROJECT NAME
APN 161-05-610-256
OMNIBLOCK MAD MAXX
MODEL #1675

PROJECT ADDRESS
IDAHO AVE. LAS VEGAS, NV

PROJECT NUMBER
24257

CLIENT
JAG DEVELOPMENT

NO.	REVISION
1	
2	
3	
4	
5	
6	
7	
8	
9	
10	
11	
12	

PROFESSIONAL ENGINEER - STATE OF NEVADA
JEFF HEDMAN
Exp: 06/30/25
CIVIL
No. 024589

DRAWN BY:
EAM

TITLE SHEET:
ROOF FRAMING PLAN

SHEET:
S4.0

NOTES:
1. CONCRETE ROOF SLAB PER FRAMING PLAN
2. SPEEDFLOOR JOIST PER FRAMING PLAN

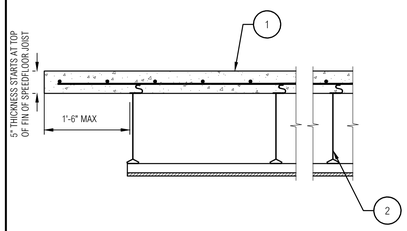

10 S5.0 SPEEDFLOOR JOIST PARALLEL TO EDGE OF ROOF
SCALE: NTS

NOTES:
1. VERTICAL REINFORCING PER MASONRY WALL SCHEDULE
2. #3 J-BARS @ 16" O.C.WITH ACI STANDARD HOOKS ALTERNATE HOOK DIRECTION EXTEND 24" INTO SLAB
3. CONCRETE ROOF SLAB PER FRAMING PLAN
4. SPEEDFLOOR JOIST PER FRAMING PLAN
5. (2) #4 BARS IN TOP COURSE. GROUT TOP COURSE MONOLITHICALLY WITH ROOF SLAB
6. HORIZONTAL REINF. PER MASONRY WALL SCHEDULE
7. TOP COURSE TO BE STANDARD CMU BLOCK
8. (1) #4 BAR CONTINUOUS

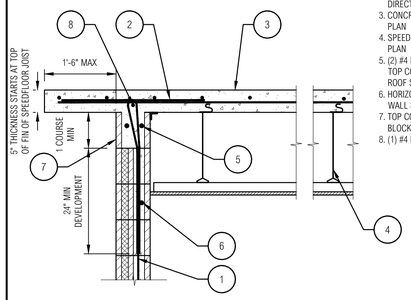

7 S5.0 SPEEDFLOOR JOIST PARALLEL TO EXT WALL
SCALE: NTS

NOTES:
1. VERTICAL REINFORCING PER MASONRY WALL SCHEDULE
2. #3 J-BARS @ 16" O.C.WITH ACI STANDARD HOOKS ALTERNATE HOOK DIRECTION EXTEND 24" INTO SLAB
3. CONCRETE ROOF SLAB PER FRAMING PLAN
4. SPEEDFLOOR JOIST PER FRAMING PLAN
5. HORIZONTAL REINF. PER MASONRY WALL SCHEDULE
6. (2) #4 BARS IN TOP COURSE. GROUT TOP COURSE MONOLITHICALLY WITH ROOF SLAB
7. TOP COURSE TO BE STANDARD CMU BLOCK
8. (1) #4 BAR CONTINUOUS
9. SPEED FLOOR JOIST SHOE PER MANUFACTURER
10. (3) 5/8" A307 BOLTS

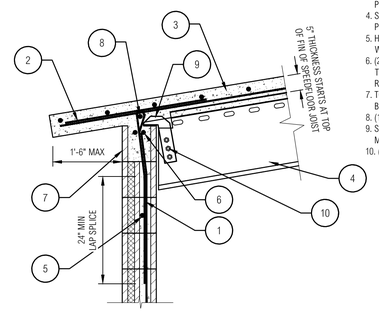

4 S5.0 SPEEDFLOOR JOIST BEARING ON EXT WALL
SCALE: NTS

NOTES:
1. HORIZONTAL REINFORCEMENT PER MASONRY WALL SCHEDULE
2. VERTICAL REINFORCEMENT PER MASONRY WALL SCHEDULE
3. CONCRETE SLAB PER FOUNDATION PLAN
4. REINFORCEMENT PER FOOTING SCHEDULE
5. STRUCTURAL FILL PER SOILS REPORT
6. #4 J-BARS TO MATCH SPACING OF WALL VERTICAL BARS-ALTERNATE HOOK DIRECTION

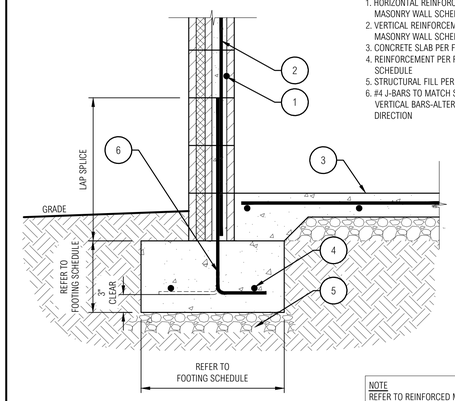

NOTE
REFER TO REINFORCED MASONRY SECTION OF S0 SHEETS FOR LAP SPLICE SCHEDULE

1 S5.0 CONTINUOUS EXTERIOR FOOTING
SCALE:NTS

NOTES:
1. OMNIBLOCK WALL PER SCHEDULE
2. HORIZONTAL REINFORCING PER CONCRETE WALL SCHEDULE
3. (2) #5 BARS VERTICAL JAMB REINFORCING UNLESS NOTED OTHERWISE IN PILASTER SCHEDULE
4. HORIZONTAL REINFORCEMENT WHERE OCCURS
5. DOOR OR WINDOW OPENING
6. TERMINATE HORIZONTAL BARS W/ ACI 180° STANDARD HOOKS AROUND JAMB STEEL ALTERNATE HOOK DIRECTION
7. VERTICAL REINFORCING PER CONCRETE WALL SCHEDULE

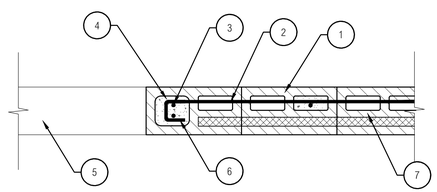

11 S5.0 JAMB REINFORCING AT OPENINGS 6'-0" OR LESS
SCALE: NTS

NOTES:
1. VERTICAL REINFORCING PER MASONRY WALL SCHEDULE
2. #3 J-BARS @ 16" O.C.WITH ACI STANDARD HOOKS ALTERNATE HOOK DIRECTION EXTEND 24" INTO SLAB
3. CONCRETE ROOF SLAB PER FRAMING PLAN
4. SPEEDFLOOR JOIST PER FRAMING PLAN
5. (2) #4 BARS IN TOP COURSE. GROUT TOP COURSE MONOLITHICALLY WITH ROOF SLAB TOP COURSE TO BE STANDARD CMU BLOCK
6. HORIZONTAL REINFORCEMENT PER MASONRY WALL SCHEDULE
7. (1) #4 BARS CONTINUOUS
8. TOP COURSE TO BE STANDARD CMU BLOCK

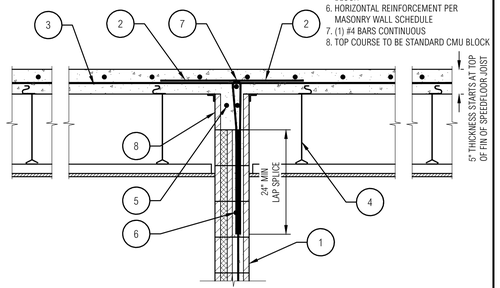

8 S5.0 SPEEDFLOOR JOIST BEARING ON EXT WALL
SCALE: NTS

NOTES:
1. VERTICAL REINFORCING PER MASONRY WALL SCHEDULE
2. #3 J-BARS @ 16" O.C.WITH ACI STANDARD HOOKS ALTERNATE HOOK DIRECTION EXTEND 24" INTO SLAB
3. CONCRETE ROOF SLAB PER FRAMING PLAN
4. SPEEDFLOOR JOIST PER FRAMING PLAN
5. HORIZONTRAL REINF. PER MASONRY WALL SCHEDULE
6. (2) #4 BARS IN TOP COURSE. GROUT TOP COURSE MONOLITHICALLY WITH ROOF SLAB
7. TOP COURSE TO BE STANDARD CMU BLOCK
8. (1) #4 BAR CONTINUOUS
9. SPEED FLOOR JOIST SHOE PER MANUFACTURER
10. (3) 5/8" A307 BOLTS

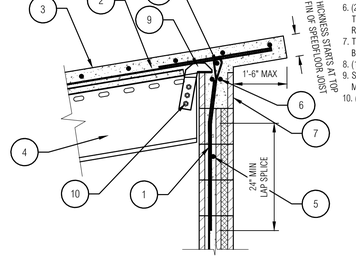

5 S5.0 SPEEDFLOOR JOIST BEARING ON EXT WALL
SCALE: NTS

NOTES:
1. HORIZONTAL REINFORCEMENT PER MASONRY WALL SCHEDULE
2. VERTICAL REINFORCEMENT PER MASONRY WALL SCHEDULE
3. #4 J-BARS TO MATCH SPACING OF WALL VERTICAL BARS-ALTERNATE HOOK DIRECTION
4. CONCRETE SLAB PER FOUNDATION PLAN
5. CONT. REINFORCING PER FOUNDATION PLAN

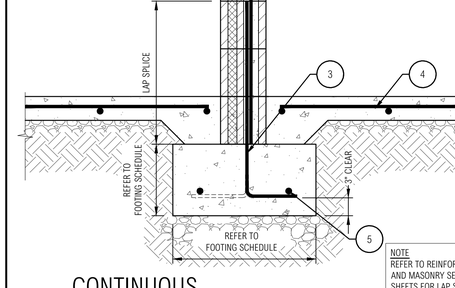

NOTE
REFER TO REINFORCED CONCRETE AND MASONRY SECTIONS OF S0 SHEETS FOR LAP SPLICE SCHEDULES

2 S5.0 CONTINUOUS CONCRETE WALL FOOTING
SCALE:NTS

NOTES:
1. OMNIBLOCK WALL PER SCHEDULE
2. HORIZONTAL REINFORCING PER MASONRY WALL SCHEDULE
3. LATERAL TIES PER MASONRY PILASTER SCHEDULE
4. HORIZONTAL REINFORCING WHERE OCCURS
5. VERTICAL REINFORCING PER MASONRY PILASTER SCHEDULE
6. DOOR OR WINDOW OPENING
7. TERMINATE HORIZONTAL BARS W/ ACI 180° STANDARD HOOKS AROUND JAMB STEEL ALTERNATE HOOK DIRECTION
8. VERTICAL REINFORCING PER MASONRY WALL SCHEDULE

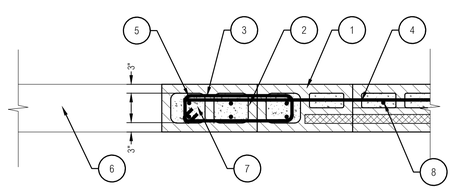

12 S5.0 JAMB REINFORCING AT LARGE OPENINGS
SCALE: NTS

NOTES:
1. STIRRUPS PER LINTEL SCHEDULE
2. #3 BARS @ 16" O.C.WITH ACI STANDARD HOOKS ALTERNATE HOOK DIRECTION EXTEND 24" INTO SLAB
3. CONCRETE ROOF SLAB PER FRAMING PLAN
4. SPEEDFLOOR JOIST PER FRAMING PLAN
5. GROUT LINTEL MONOLITHICALLY WITH ROOF SLAB
6. REINFORCEMENT PER LINTEL SCHEDULE
7. (1) #4 BAR CONTINUOUS
8. SPEED FLOOR JOIST SHOE PER MANUFACTURER
9. (3) 5/8" A307 BOLTS

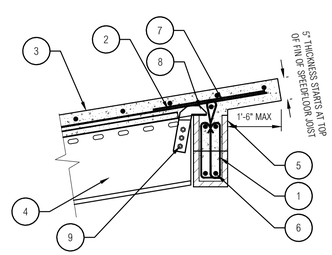

9 S5.0 SPEEDFLOOR JOIST BEARING ON EXT WALL
SCALE: NTS

NOTES:
1. VERTICAL REINFORCING PER MASONRY WALL SCHEDULE
2. #3 J-BARS @ 16" O.C.WITH ACI STANDARD HOOKS ALTERNATE HOOK DIRECTION EXTEND 24" INTO SLAB
3. CONCRETE ROOF SLAB PER FRAMING PLAN
4. SPEEDFLOOR JOIST PER FRAMING PLAN
5. (1) #4 BAR CONTINUOUS
6. (2) #4 BARS IN TOP COURSE. GROUT TOP COURSE MONOLITHICALLY WITH ROOF SLAB
7. HORIZONTAL REINFORCING PER MASONRY WALL SCHEDULE
8. TOP COURSE TO BE STANDARD CMU BLOCK

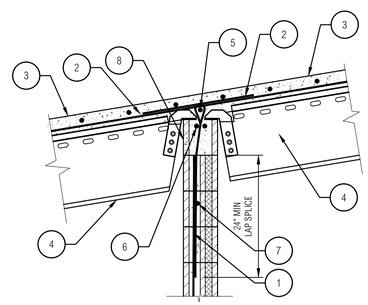

6 S5.0 SPEEDFLOOR JOIST BEARING ON INT WALL
SCALE: NTS

NOTES:
1. HORIZONTAL TIES PER MASONRY PILASTER SCHEDULE
2. VERTICAL REINFORCEMENT PER MASONRY PILASTER SCHEDULE
3. CONCRETE SLAB PER FOUNDATION PLAN
4. REINFORCEMENT PER FOOTING SCHEDULE
5. STRUCTURAL FILL PER SOILS REPORT

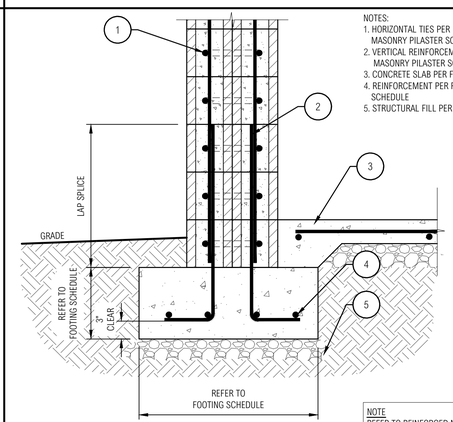

NOTE
REFER TO REINFORCED MASONRY SECTION OF S0 SHEETS FOR LAP SPLICE SCHEDULE

3 S5.0 COLUMN SPOT FOOTING
SCALE:NTS

JEFF HEDMAN, PE
216 WST. GEORGE BOULEVARD, SUITE 203, LIT 84778
PH: 435-313-4182 EMAIL: jeff@hedmanengineering.com

ALL DRAWINGS AND SPECIFICATIONS ISSUED AS PART OF THE SERVICES RENDERED BY JEFF HEDMAN, PE FOR THIS PROJECT SHALL REMAIN THE PROPERTY OF JEFF HEDMAN, PE, ANY DUPLICATION OF THE DRAWINGS AND/OR SPECIFICATIONS WITHOUT THE WRITTEN CONSENT OF JEFF HEDMAN, PE IS PROHIBITED AND ANY USE BY OTHERS IS STRICTLY PROHIBITED WITHOUT THE WRITTEN CONSENT OF JEFF HEDMAN, PE

PROJECT NAME
APN 161-05-610-256
OMNIBLOCK MAD MAXX
MODEL #1675

PROJECT ADDRESS
IDAHO AVE. LAS VEGAS, NV

PROJECT NUMBER
24257

CLIENT
JAG DEVELOPMENT

PROFESSIONAL ENGINEER - STATE OF NEVADA
JEFF HEDMAN
Exp: 06/30/25
CIVIL
No. 024589

DRAWN BY:
EAM

TITLE SHEET:
STRUCTURAL DETAILS

SHEET:
S5.0